Cove Lighting Kit

AL-KIT-CWCL-RGB3K-24

Full Component Kit, IP20, Color Changing

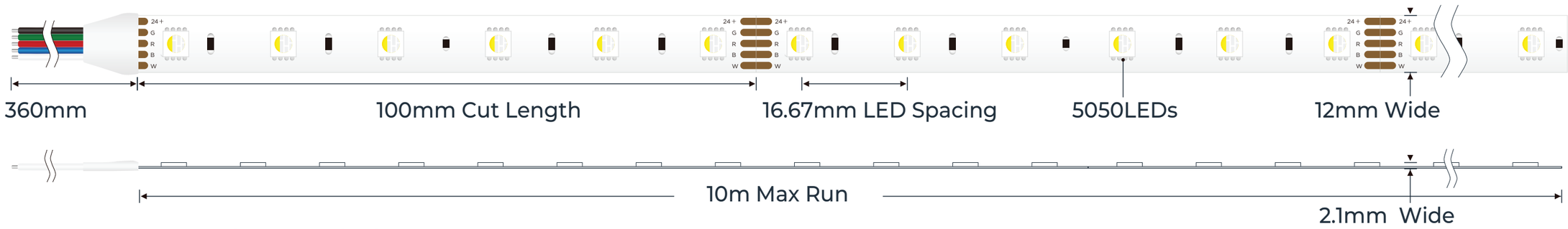

Endless RGBW Color Changing LED Strip Light
AL-SL-EN-CC-IP20-24-RGBW-32

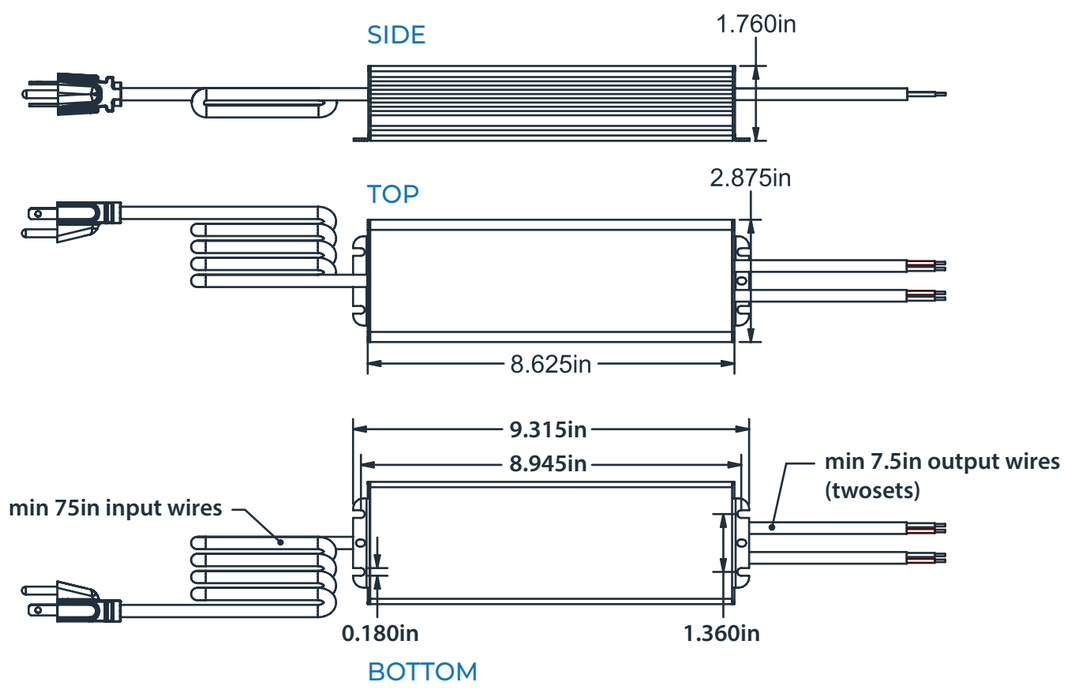

250 Watt LED Power Supply
AL-PS-W-250-24

64ft Strip Kit (2 Reel)

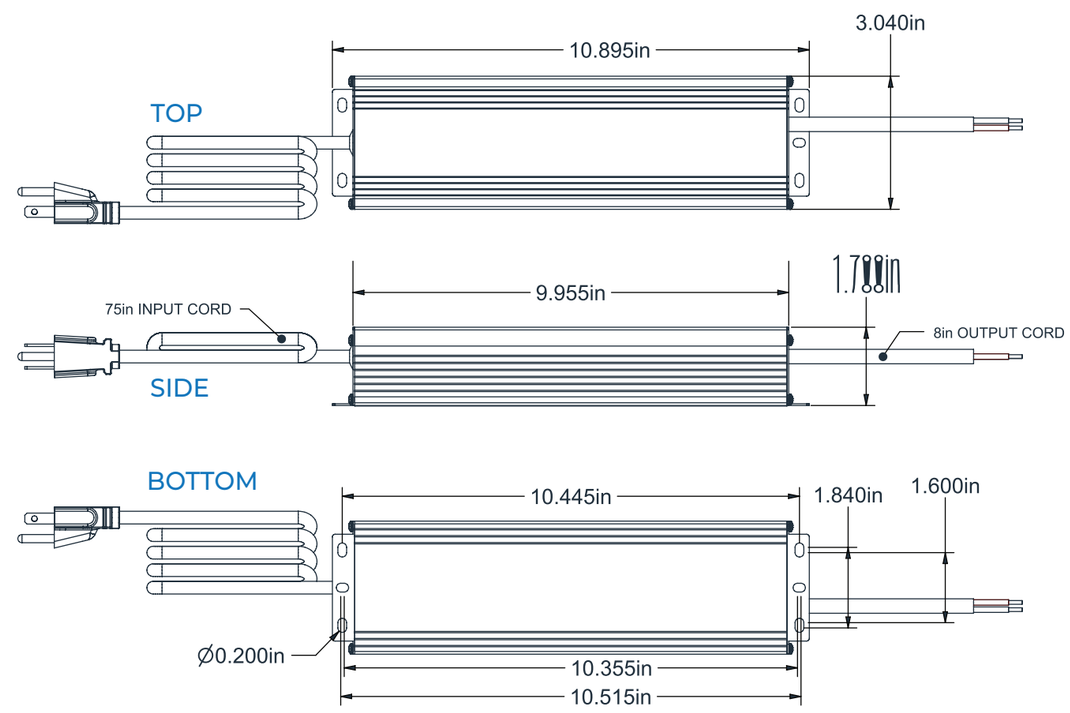

300 Watt LED Power Supply
AL-PS-W-300-24

98ft Strip Kit (3 Reel)

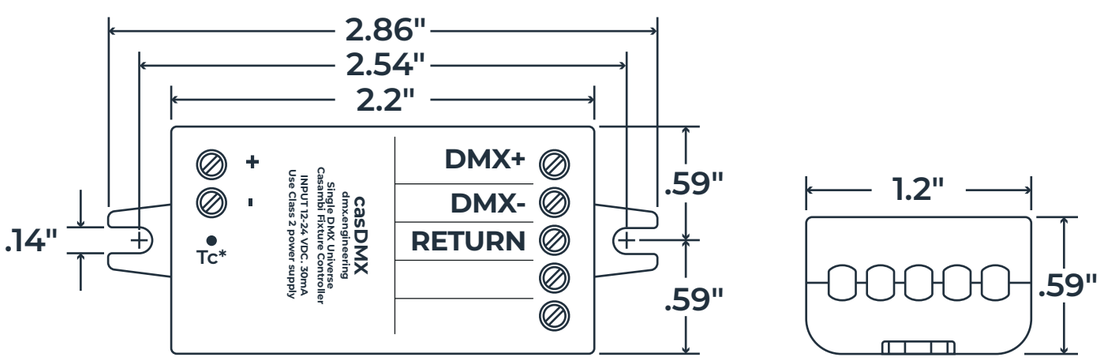

*Tc point is on bottom side

Casambi Wireless DMX Controller, 1 Universe
AL-CTLR-CAS-DMX

Included in Weather Resistant Box

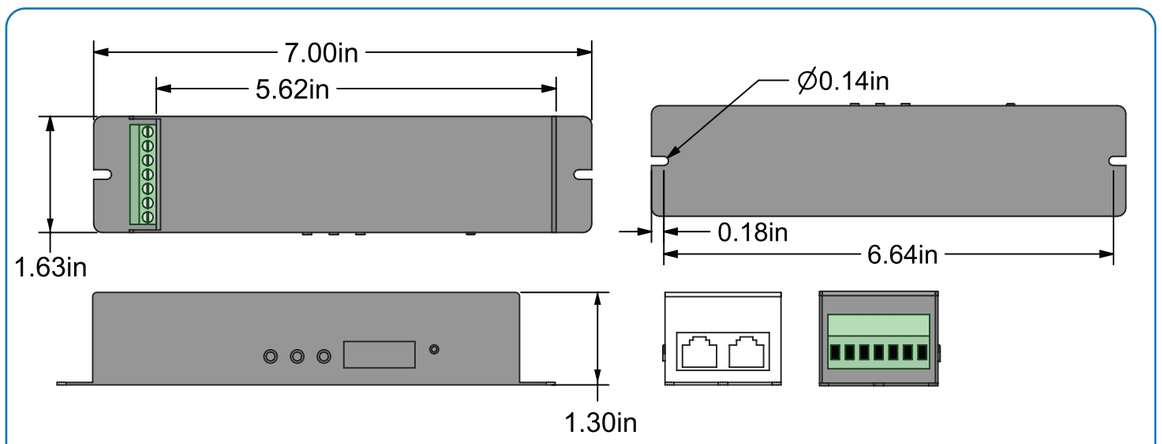

4-Channel DMX512 Decoder and LED Driver
AL-CTLR-DMXDEC4

Included in Weather Resistant Box

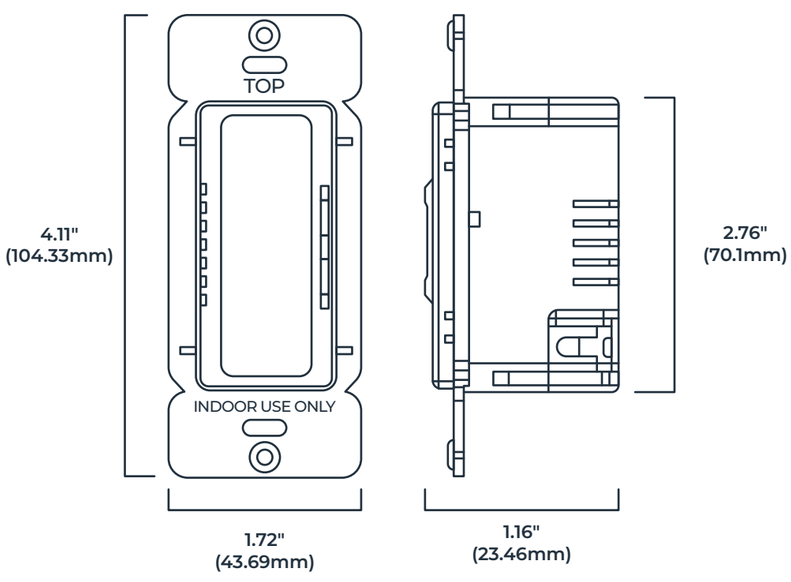

Casambi In-Wall Wireless Dimmer Switch
AL-CTLR-DIMSW-CAS

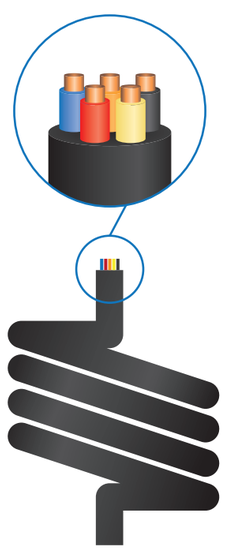

14 AWG 5 Conductor Stranded Wire
(In-Wall Rated)
AL-WIRE-14-5

W-Series RGBW Solderless Splice Bite Connector
AL-SL-CN-WRGBW-SPLICE

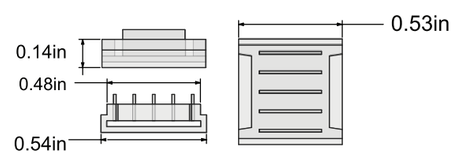

W-Series RGBW Solderless Jumper Bite Connector
AL-SL-CN-WRGBW-JUMPER

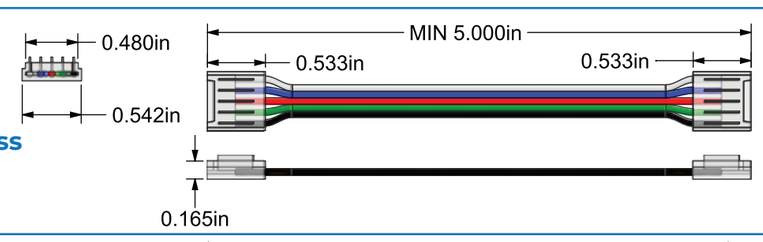

W-Series RGBW Solderless Pigtail Bite Connector
AL-SL-CN-WRGBW-PIGTAIL

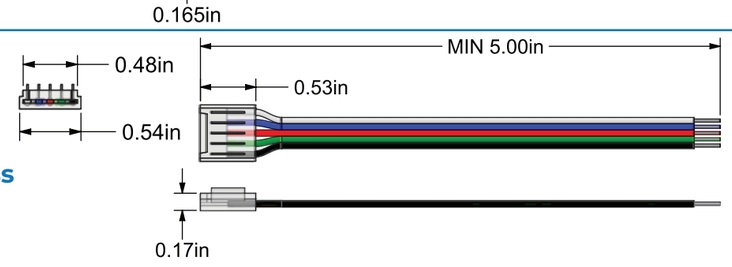

Copyright © 2026 aspectLED™